REVISION RECORD			
LTR	ECO NO:	APPROVED:	DATE:

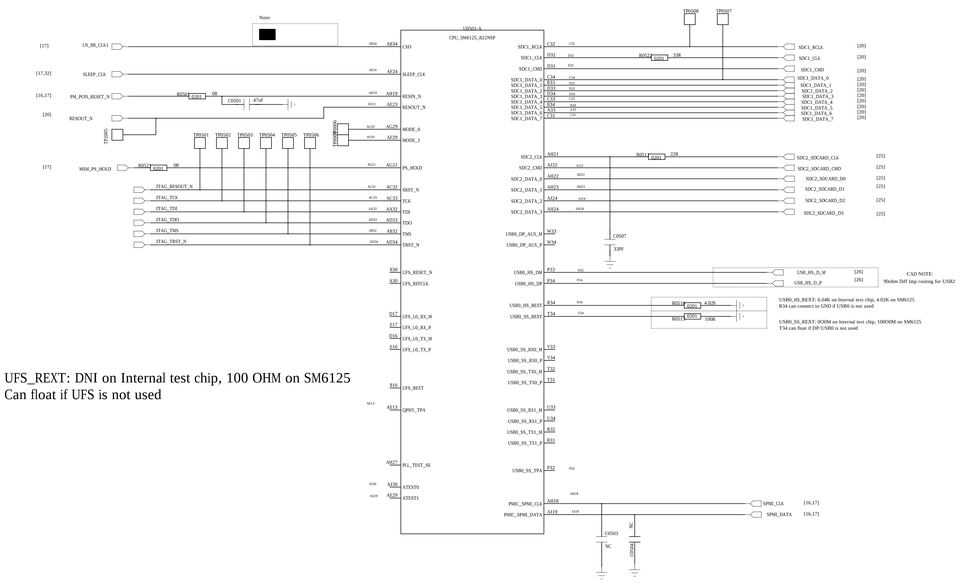

UFS_REXT: DNI on Internal test chip, 100 OHM on SM6125
Can float if UFS is not used

		COMPANY: <Company Name>			
		TITLE: <Title>			
DRAWN: <Drawn By>	DATED: <Drawn Date>				
CHECKED: <Checked By>	DATED: <Checked Date>	CODE: <Code>	SIZE: A0	DRAWING NO: <Drawing Number>	REV: <Revision>
QUALITY CONTROL: <QC By>	DATED: <QC Date>				
RELEASED: <Released By>	DATED: <Release Date>	SCALE: <Scale>		SHEET: 6r 34	

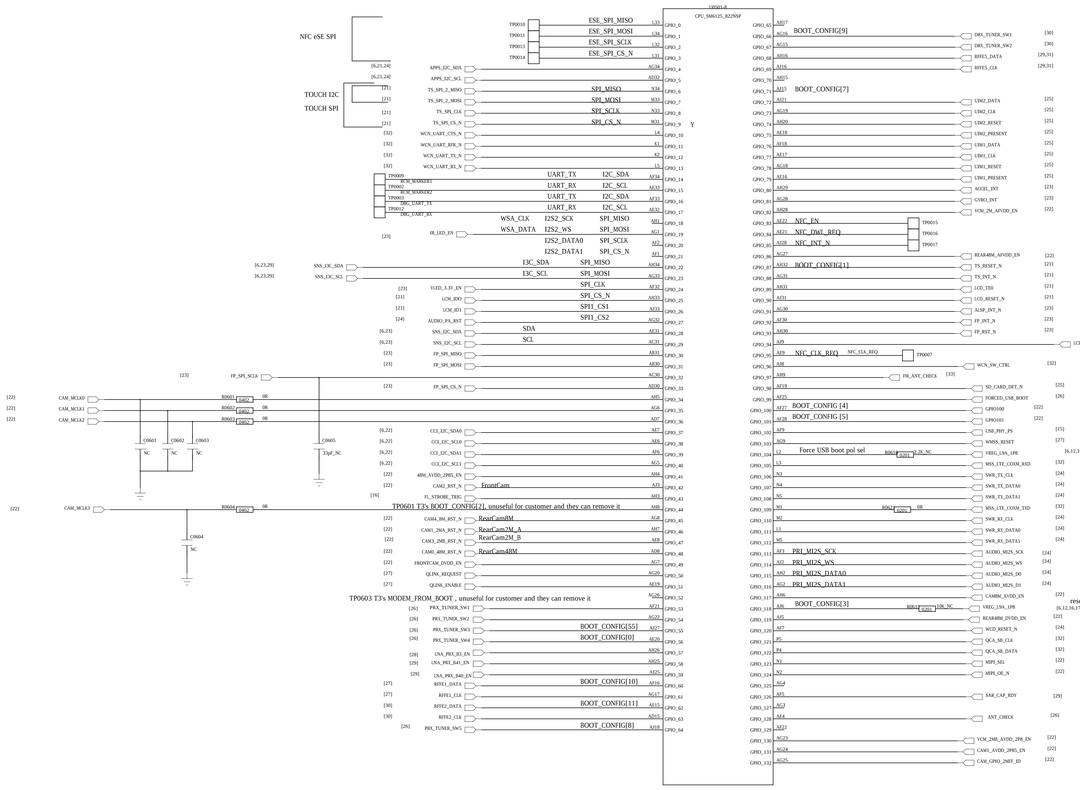

FORCE_USB_BOOT	FORCE_USB_POLARITY_SEL	FORCE_USB_BOOT FUNCTION
GND	GND	Normal Boot -Legacy
PULLED UP	GND	EDL Mode -Legacy
PULLED UP	PULLED UP	Normal Boot -Polarity Inversion
GND	PULLED UP	EDL Mode -Polarity Inversion

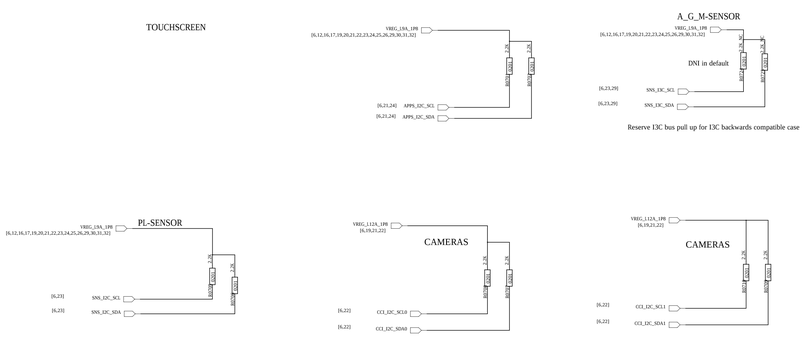

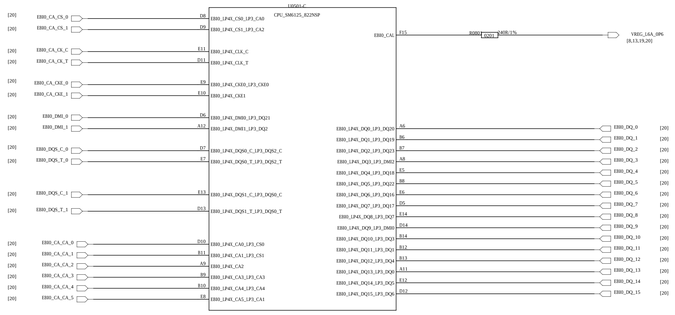
U0501-C
CPU_SM6125_B22NSP
EB0_CA_CS_0
EB0_CA_CS_1
EB0_CA_CK_C
EB0_CA_CK_T
EB0_CA_CKE_0
EB0_CA_CKE_1
EB0_DM0_0
EB0_DM0_1
EB0_DQS_C_0
EB0_DQS_T_0
EB0_DQS_C_1
EB0_DQS_T_1
EB0_CA_CA_0
EB0_CA_CA_1
EB0_CA_CA_2
EB0_CA_CA_3
EB0_CA_CA_4
EB0_CA_CA_5
EB0_LPA5_CS0_LP3_CA0
EB0_LPA5_CS1_LP3_CA2
EB0_LPA5_CLK_C
EB0_LPA5_CLK_T
EB0_LPA5_CKE0_LP3_CKE0
EB0_LPA5_CKE1
EB0_LPA5_DM0_LP3_DQ21
EB0_LPA5_DM1_LP3_DQ2
EB0_LPA5_DQS0_C_LP3_DQS2_C
EB0_LPA5_DQS0_T_LP3_DQS2_T
EB0_LPA5_DQS1_C_LP3_DQS0_C
EB0_LPA5_DQS1_T_LP3_DQS0_T
EB0_LPA5_CA0_LP3_CS0
EB0_LPA5_CA1_LP3_CS1
EB0_LPA5_CA2
EB0_LPA5_CA3_LP3_CA3
EB0_LPA5_CA4
EB0_LPA5_CA5_LP3_CA1
EB0_CAL
R0802
240R/1%
VREG_1A6_0P6
[8,13,19,20]
EB0_LPA5_DQ0_LP3_DQ20
EB0_LPA5_DQ1_LP3_DQ19
EB0_LPA5_DQ2_LP3_DQ23
EB0_LPA5_DQ3_LP3_DM2
EB0_LPA5_DQ4_LP3_DQ18
EB0_LPA5_DQ5_LP3_DQ22
EB0_LPA5_DQ6_LP3_DQ17
EB0_LPA5_DQ7_LP3_DQ21
EB0_LPA5_DQ8_LP3_DQ7
EB0_LPA5_DQ9_LP3_DM0
EB0_LPA5_DQ10_LP3_DQ4
EB0_LPA5_DQ11_LP3_DQ1
EB0_LPA5_DQ12_LP3_DQ6
EB0_LPA5_DQ13_LP3_DQ0
EB0_LPA5_DQ14_LP3_DQ5
EB0_LPA5_DQ15_LP3_DQ3
EB0_DQ_0
EB0_DQ_1
EB0_DQ_2
EB0_DQ_3
EB0_DQ_4
EB0_DQ_5
EB0_DQ_6
EB0_DQ_7
EB0_DQ_8
EB0_DQ_9
EB0_DQ_10
EB0_DQ_11
EB0_DQ_12
EB0_DQ_13
EB0_DQ_14
EB0_DQ_15

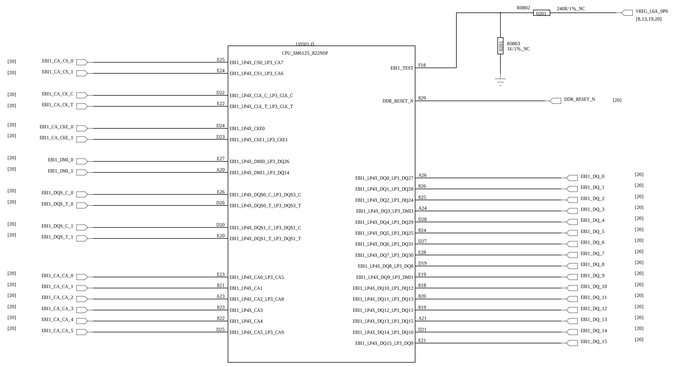
U0501-D
CPU_SM6125_B22NSP
EB1_CA_CS_0
EB1_CA_CS_1
EB1_CA_CK_C
EB1_CA_CK_T
EB1_CA_CKE_0
EB1_CA_CKE_1
EB1_DM0_0
EB1_DM0_1
EB1_DQS_C_0
EB1_DQS_T_0
EB1_DQS_C_1
EB1_DQS_T_1
EB1_CA_CA_0
EB1_CA_CA_1
EB1_CA_CA_2
EB1_CA_CA_3
EB1_CA_CA_4
EB1_CA_CA_5
EB1_LPA5_CS0_LP3_CA7
EB1_LPA5_CS1_LP3_CA6
EB1_LPA5_CLK_C_LP3_CLK_C
EB1_LPA5_CLK_T_LP3_CLK_T
EB1_LPA5_CKE0
EB1_LPA5_CKE1_LP3_CKE1
EB1_LPA5_DM0_LP3_DQ26
EB1_LPA5_DM1_LP3_DQ14
EB1_LPA5_DQS0_C_LP3_DQS3_C
EB1_LPA5_DQS0_T_LP3_DQS3_T
EB1_LPA5_DQS1_C_LP3_DQS1_C
EB1_LPA5_DQS1_T_LP3_DQS1_T
EB1_LPA5_CA0_LP3_CA5
EB1_LPA5_CA1
EB1_LPA5_CA2_LP3_CA8
EB1_LPA5_CA3
EB1_LPA5_CA4
EB1_LPA5_CA5_LP3_CA9
EB1_TEST
R0803
16/1%_NC
VREG_1A6_0P6
[8,13,19,20]
DDR_RESET_N
EB1_LPA5_DQ0_LP3_DQ27
EB1_LPA5_DQ1_LP3_DQ28
EB1_LPA5_DQ2_LP3_DQ24
EB1_LPA5_DQ3_LP3_DM3
EB1_LPA5_DQ4_LP3_DQ29
EB1_LPA5_DQ5_LP3_DQ25
EB1_LPA5_DQ6_LP3_DQ31
EB1_LPA5_DQ7_LP3_DQ30
EB1_LPA5_DQ8_LP3_DQ8
EB1_LPA5_DQ9_LP3_DM1
EB1_LPA5_DQ10_LP3_DQ12
EB1_LPA5_DQ11_LP3_DQ13
EB1_LPA5_DQ12_LP3_DQ11
EB1_LPA5_DQ13_LP3_DQ15
EB1_LPA5_DQ14_LP3_DQ10
EB1_LPA5_DQ15_LP3_DQ9
EB1_DQ_0
EB1_DQ_1
EB1_DQ_2
EB1_DQ_3
EB1_DQ_4
EB1_DQ_5
EB1_DQ_6
EB1_DQ_7
EB1_DQ_8
EB1_DQ_9
EB1_DQ_10
EB1_DQ_11
EB1_DQ_12
EB1_DQ_13
EB1_DQ_14
EB1_DQ_15

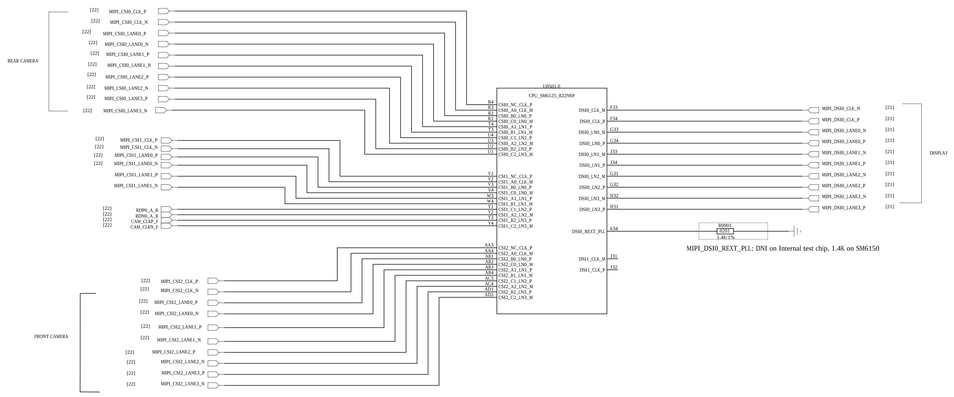

MIPI_DSI0_REXT_PLL: DNI on Internal test chip, 1.4K on SM6150

<Company Name>

DRAWING NO: <Drawing Number>

REV: <Revision>

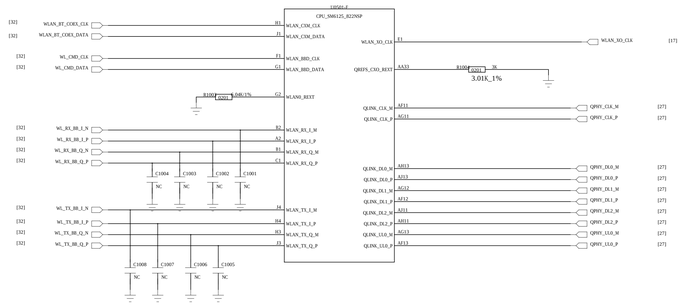

DRAWN: LiuMengya	DATED: <Drawn Date>	<Company Name>		
		21_LTE_B7		
		CODE: <Code>	SIZE: A0	DRAWING NO: <Drawing Number> REV: <Revision>

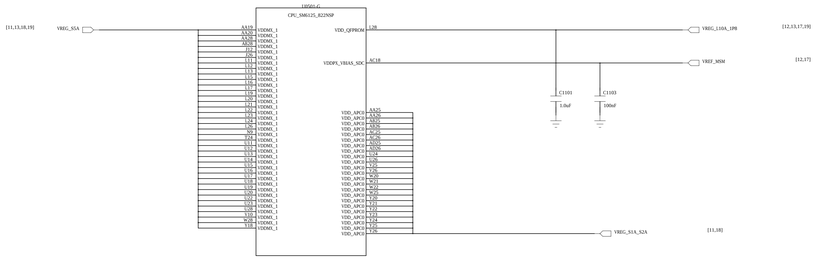

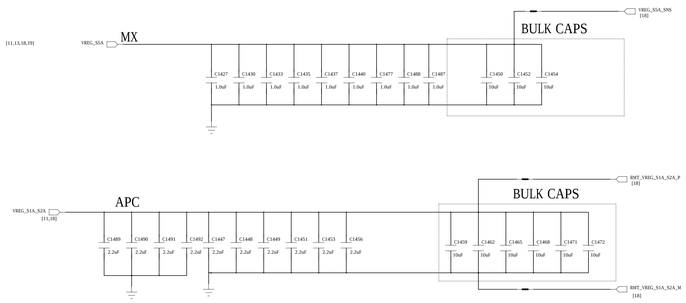

<Company Name>

DRAWING NO: <Drawing Number>

REV: <Revision>

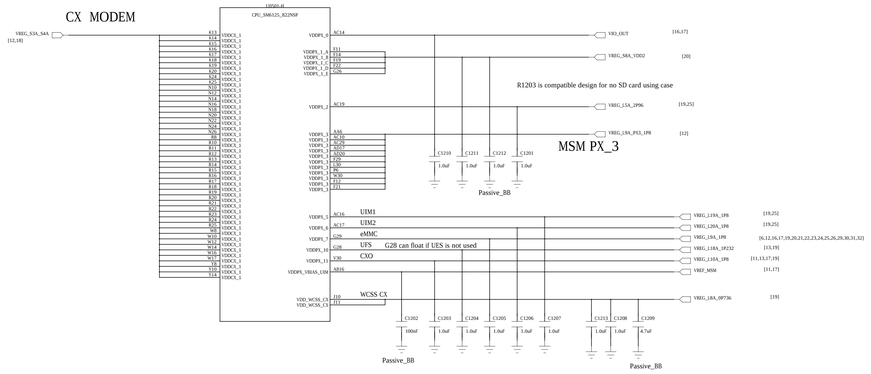
CX MODEM
MSM PX_3
R1203 is compatible design for no SD card using case
Passive_BB
UIM1
UIM2
eMMC
UFS
G28 can float if UES is not used
CXO
WCSS CX

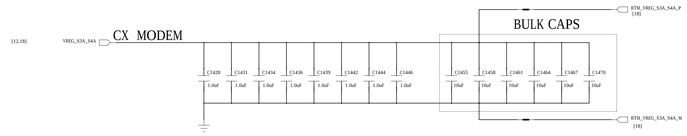
CX MODEM
BULK CAPS

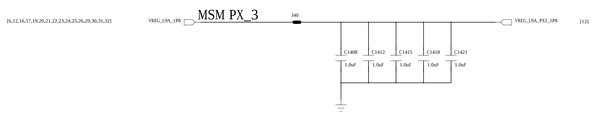
MSM PX_3

REVISION RECORD			
LTR:	ECO NO.:	APPROVED:	DATE:

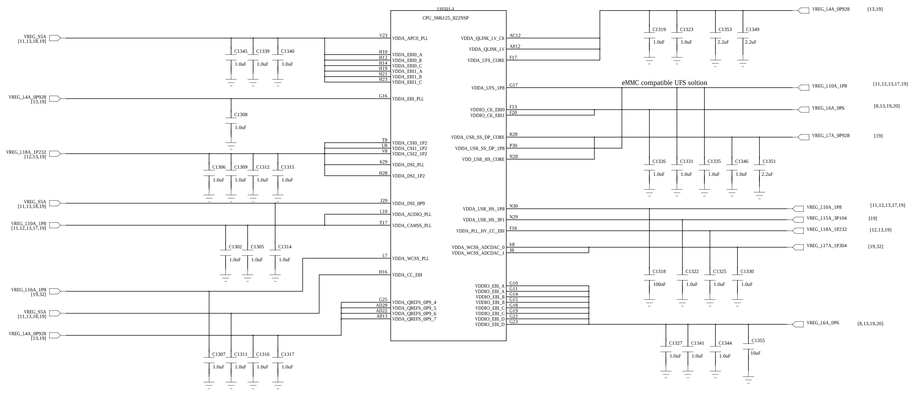

		COMPANY: <Company Name>			
		TITLE: <Title>			
DRAWN: <Drawn By>	DATED: <Drawn Date>				
CHECKED: <Checked By>	DATED: <Checked Date>	CODE: <Code>	SIZE: A0	DRAWING NO: <Drawing Number>	REV: <Revision>
QUALITY CONTROL: <QC By>	DATED: <QC Date>				
RELEASED: <Released By>	DATED: <Release Date>	SCALE: <Scale>		SHEET: 48 OF 34	

REVISION RECORD			
LTR	ECO NO:	APPROVED:	DATE:

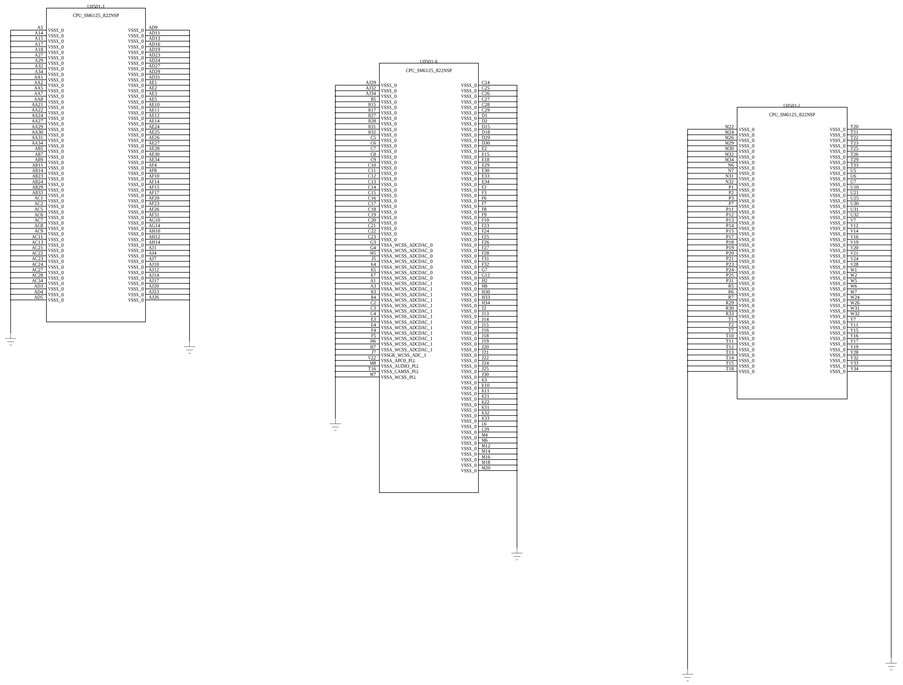

		COMPANY: <Company Name>			
		TITLE: <Title>			
DRAWN: <Drawn By>	DATED: <Drawn Date>				
CHECKED: <Checked By>	DATED: <Checked Date>	CODE: <Code>	SIZE: A0	DRAWING NO: <Drawing Number>	REV: <Revision>
QUALITY CONTROL: <QC By>	DATED: <QC Date>				
RELEASED: <Released By>	DATED: <Release Date>	SCALE: <Scale>		SHEET: 4 of 34	

Use C1301= 4.7uF for Single Charging Config

Use C1301 = 2.2uF for Parallel Charging Config

PMI632 VIN limit 10V

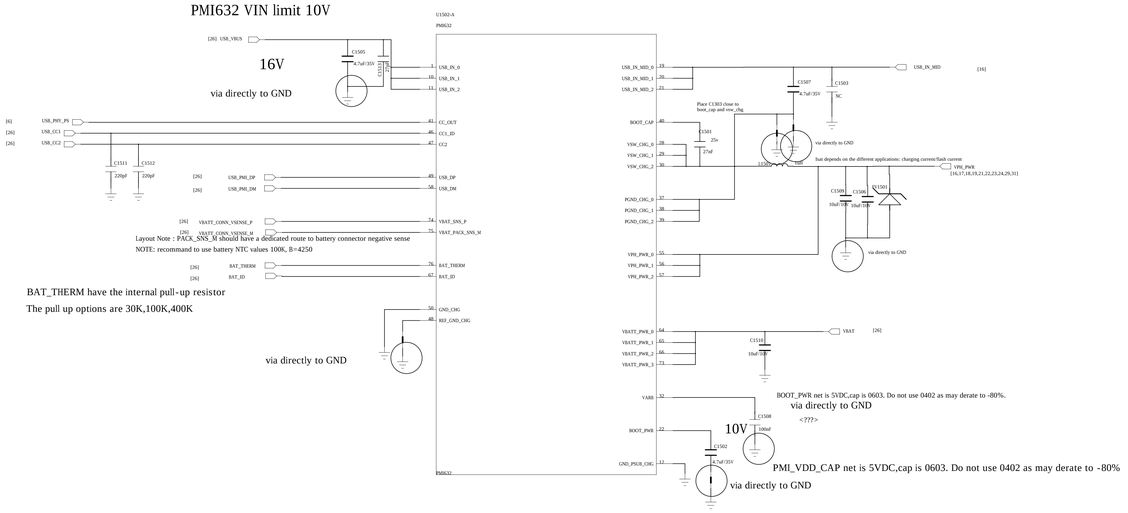

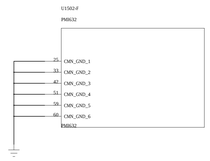

NOT TO BE USED, COPIED, REPRODUCED IN WHOLE OR IN PART, NOR ITS CONTENTS REVEALED IN ANY MANNER TO OTHERS WITHOUT THE EXPRESS WRITTEN PERMISSION OF QUALCOMM.

PMI8952 Charger

QUALCOMM Technologies, Inc.
5775 Morehouse Drive
San Diego, CA 92121-1714
U.S.A.

Title

Size | Number | Rev

Date: | Sheet of

REVISION RECORD			
LTR	ECO NO.	APPROVED:	DATE:

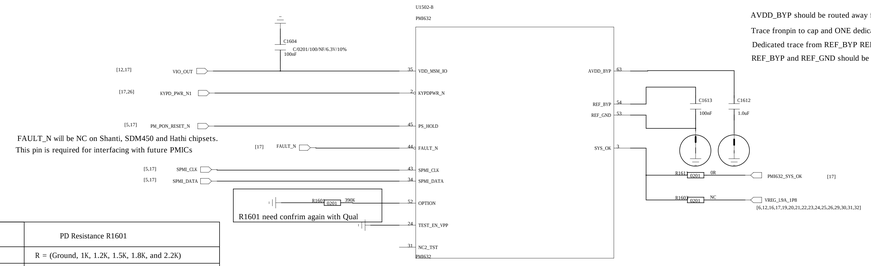

AVDD_BYP should be routed away from noisy traces

Trace fronpin to cap and ONE dedicated via fron cap to main groung plane.

Dedicated trace from REF_BYP REF_GND to cap

REF_BYP and REF_GND should be routed away from noisy trace

OPTION	PON Configuration	PD Resistance R1601
1	SPMI, Micro USB, FMB_DIS	R = (Ground, 1K, 1.2K, 1.5K, 1.8K, and 2.2K)
2	SPMI, Micro USB, FMB_EN	R = (3.3K, 3.9K, 4.7K, and 5.6K)
3	I2C, Micro USB, FMB_DIS	R = (8.2K, 10K, 12K, and 15K)
4	I2C, Micro USB, FMB_EN	R = (22K, 27K, 33K, and 39K)
5	I2C, Type-C, FMB_DIS	R = (56K, 68K, 82K, and 100K
6	I2C, Type-C, FMB_EN	R = (150K, 180K, and 220K)
7	SPMI, Type-C, FMB_DIS	R = (330K, 390K, and 470K)
8	SPMI, Type-C, FMB_EN	R = (820K, 1M, 1.2M, and Open)

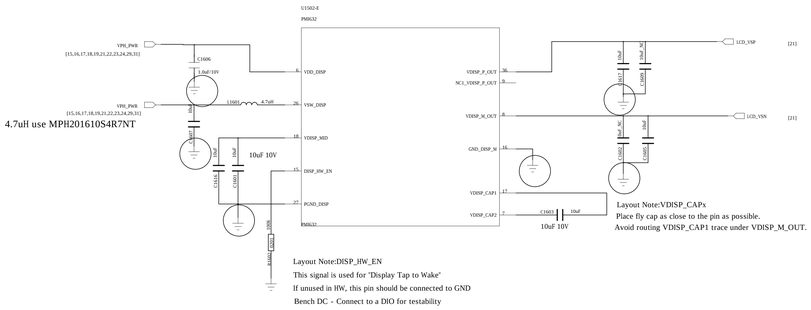

Note: place RT6 close to Hot spot between PMI632 and SMB1355

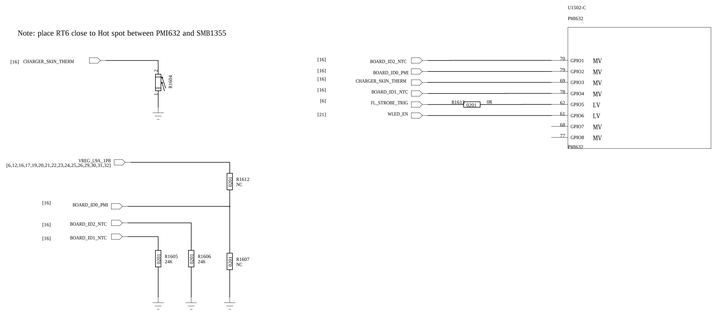

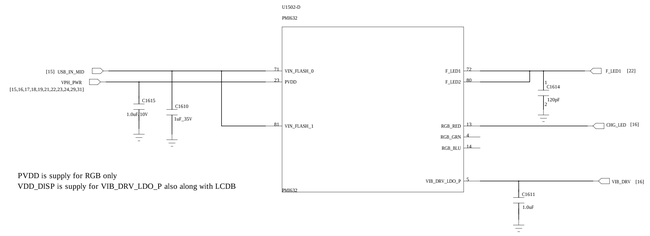

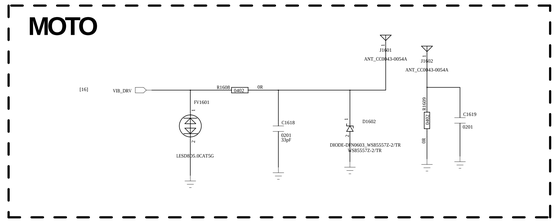

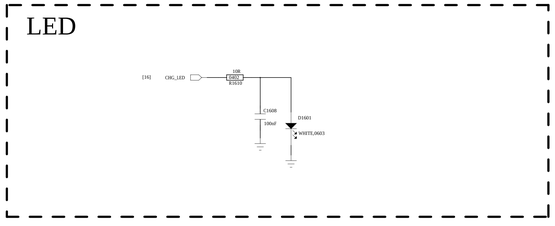

COMPANY: <Company Name>			
TITLE: <Title>			
DRAWN: <Drawn By>	DATED: <Drawn Date>		
CHECKED: <Checked By>	DATED: <Checked Date>	CODE: <Code>	SIZE: A0
QUALITY CONTROL: <QC By>	DATED: <QC Date>	DRAWING NO: <Drawing Number>	REV: <Revision>
RELEASED: <Released By>	DATED: <Release Date>	SCALE: <Scale>	SHEET: 16 OF 34

REVISION RECORD			
LTR	ECO NO:	APPROVED:	DATE:

Place near to the SDM about 1cm and put ino the shielding

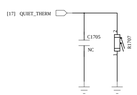

Pls near the rear0 camera

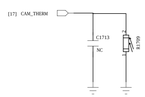

Pls near to the memory

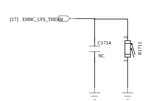

Layout Note:
No trace shall be present in at-least two immediate layers below XTAL.

Route XTAL IN/OUT trace with
length between 3mm and 10mm

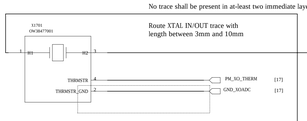

Note: SO GND should connect to XOADC_GND pin using thin trace, then via to main ground plane under the SO_THERM cap ground

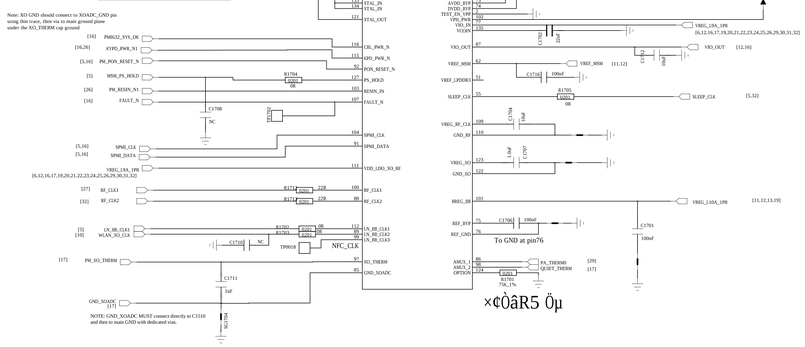

×¢0âR5 Öµ

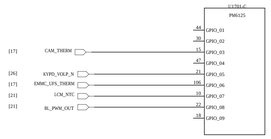

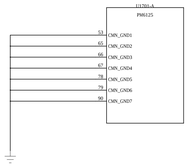

NOTE: Connect GND_XO_ISO to main GND plane using dedicated via.
Do not share this GND with other grounds.

COMPANY: <Company Name>					
TITLE: <Title>					
DRAWN: <Drawn By>	DATED: <Drawn Date>	CODE: <Code>	SIZE: A0	DRAWING NO: <Drawing Number>	REV: <Revision>
CHECKED: <Checked By>	DATED: <Checked Date>				
QUALITY CONTROL: <QC By>	DATED: <QC Date>				
RELEASED: <Released By>	DATED: <Release Date>	SCALE: <Scale>		SHEET: 47 34	

REVISION RECORD			
LTR	ECO NO:	APPROVED:	DATE:

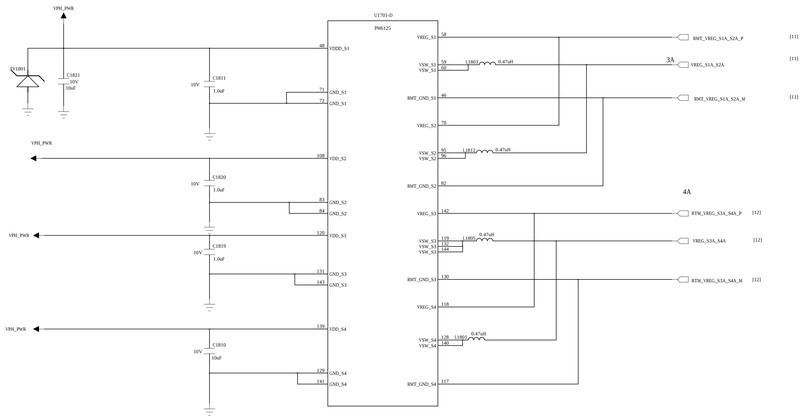

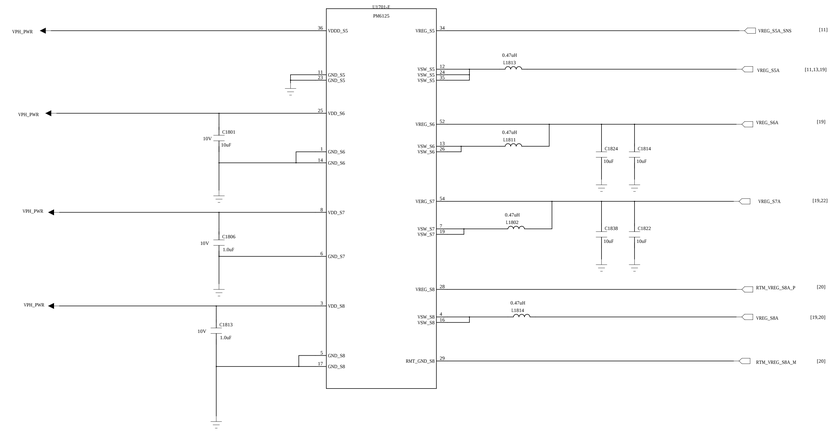

COMPANY: <Company Name>				
TITLE: <Title>				
DRAWN: <Drawn By>	DATE: <Drawn Date>			
CHECKED: <Checked By>	DATE: <Checked Date>	CODE: <Code>	SIZE: A0	DRAWING NO: <Drawing Number>
QUALITY CONTROL: <QC By>	DATE: <QC Date>			REV: <Revision>
RELEASED: <Released By>	DATE: <Release Date>	SCALE: <Scale>		SHEET: 48 34

REVISION RECORD			
LTR:	ECO NO:	APPROVED:	DATE:

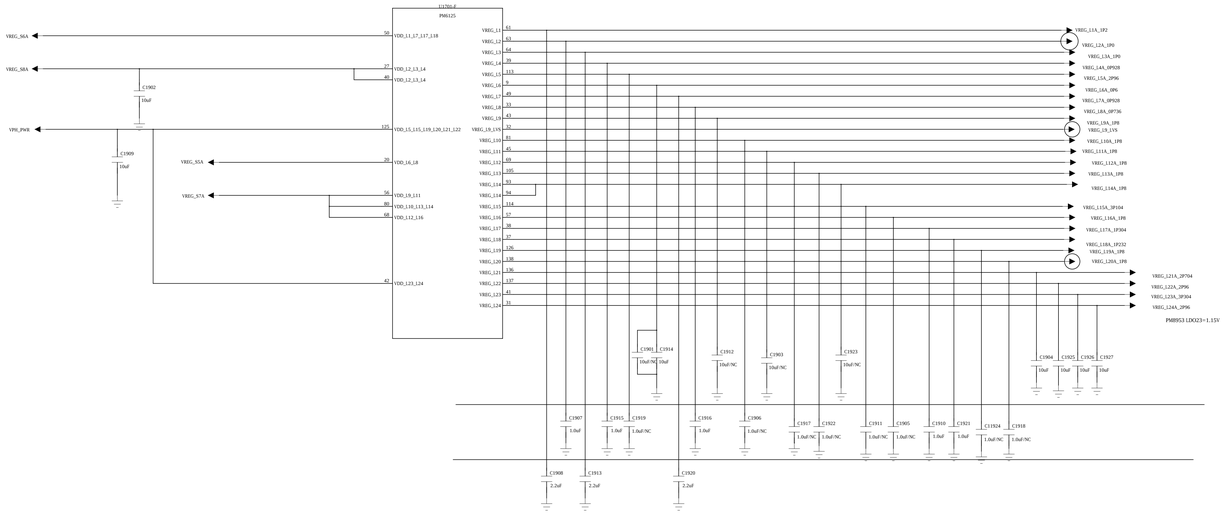

COMPANY: <Company Name>				
TITLE: <Title>				
DRAWN: <Drawn By>	DATED: <Drawn Date>	CODE: <Code>	SIZE: A0	DRAWING NO: <Drawing Number>
CHECKED: <Checked By>	DATED: <Checked Date>			REV: <Revision>
QUALITY CONTROL: <QC By>	DATED: <QC Date>			
RELEASED: <Released By>	DATED: <Release Date>	SCALE: <Scale>		SHEET: 40 34

REVISION RECORD			
LTR	ECO NO:	APPROVED:	DATE:

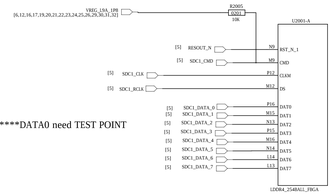

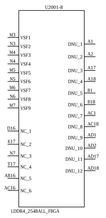

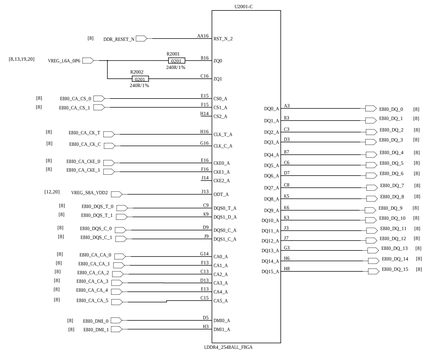

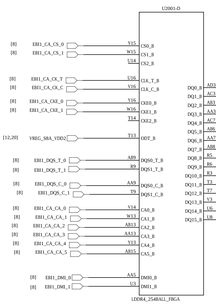

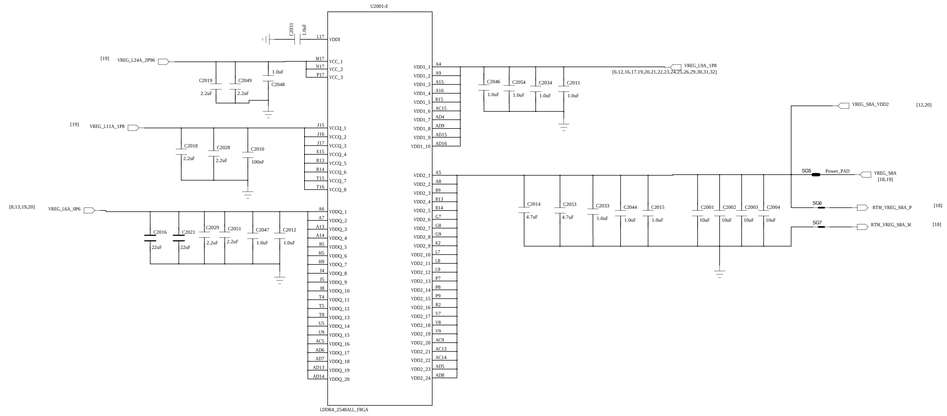

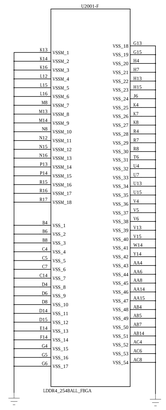

COMPANY: <Company Name>			
TITLE: <Title>			
DRAWN: <Drawn By>	DATED: <Drawn Date>		
CHECKED: <Checked By>	DATED: <Checked Date>	CODE: <Code>	SIZE: A0
QUALITY CONTROL: <QC By>	DATED: <QC Date>	DRAWING NO: <Drawing Number>	REV: <Revision>
RELEASED: <Released By>	DATED: <Release Date>	SCALE: <Scale>	SHEET: 20 OF 34

REVISION RECORD			
LTR:	ECO NO:	APPROVED:	DATE:

LCM

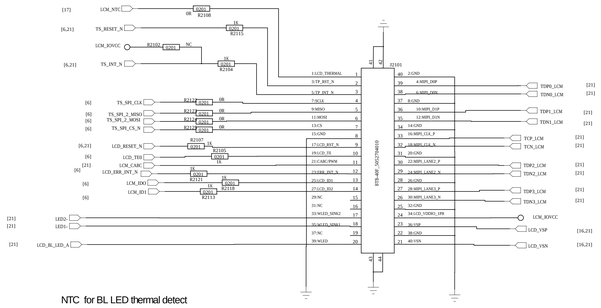

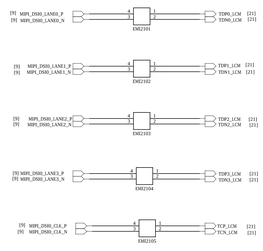

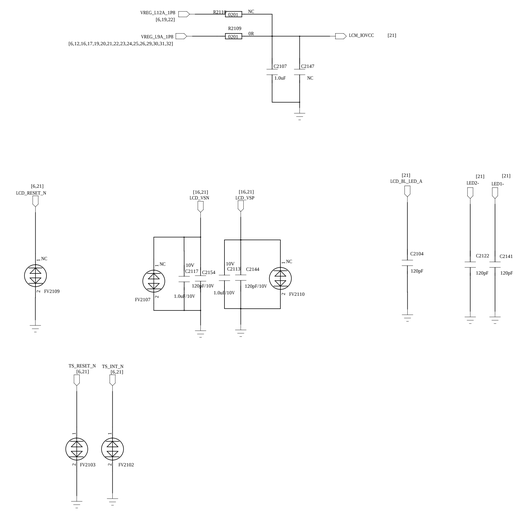

LCM Black Light

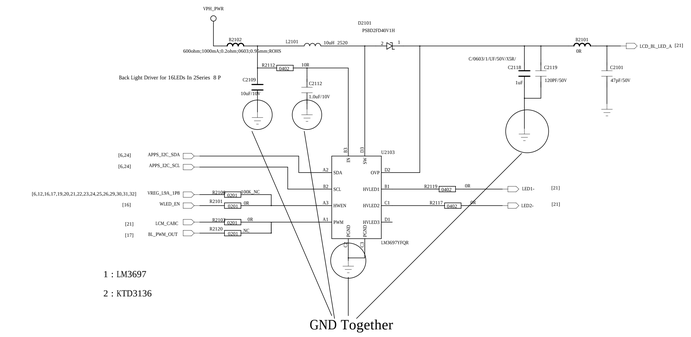

COMPANY: <Company Name>			
TITLE: <Title>			
DRAWN: <Drawn By>	DATED: <Drawn Date>		
CHECKED: <Checked By>	DATED: <Checked Date>	CODE: <Code>	SIZE: A0
QUALITY CONTROL: <QC By>	DATED: <QC Date>	DRAWING NO: <Drawing Number>	REV: <Revision>
RELEASED: <Released By>	DATED: <Release Date>	SCALE: <Scale>	SHEET: 34 OF 34

REVISION RECORD			
LTR	ECO NO:	APPROVED:	DATE:

Main Camera A

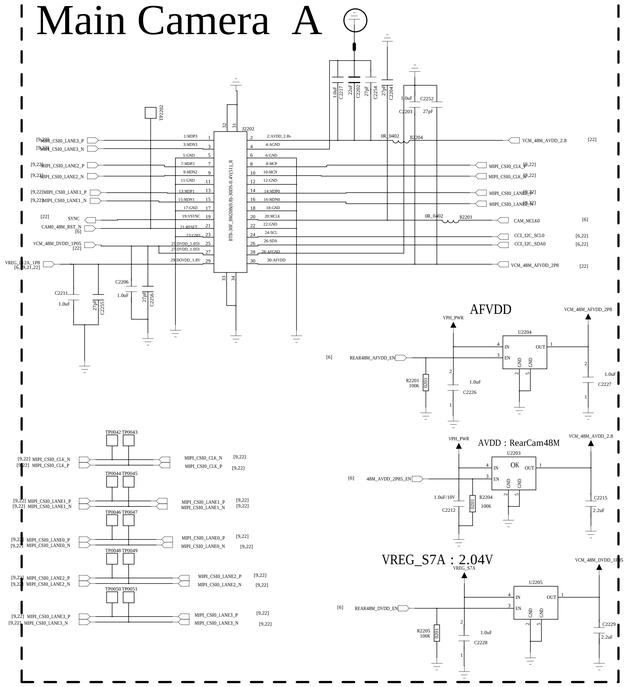

Main Camera B 2M
2M FF

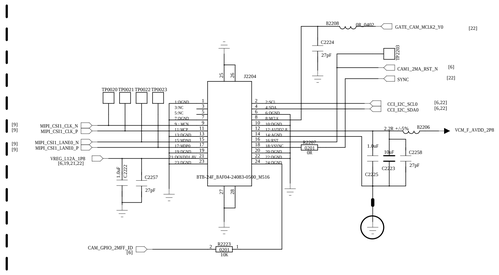

Front & Rear 2MCamera clk buffer

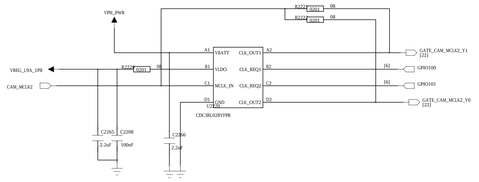

Main Camera C 2M
2M AF

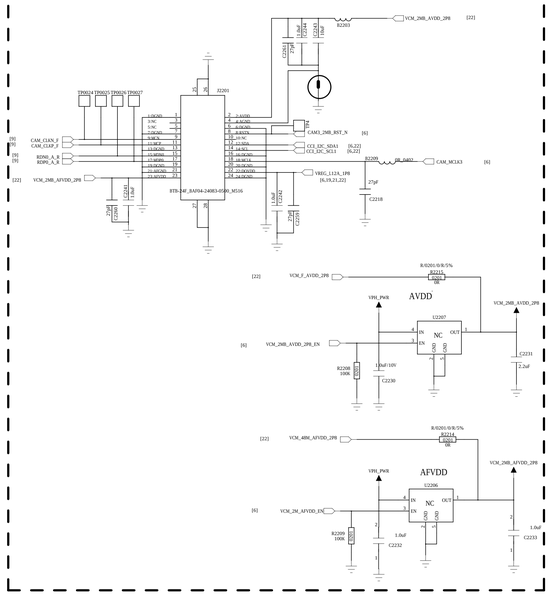

Main Camera D 8M

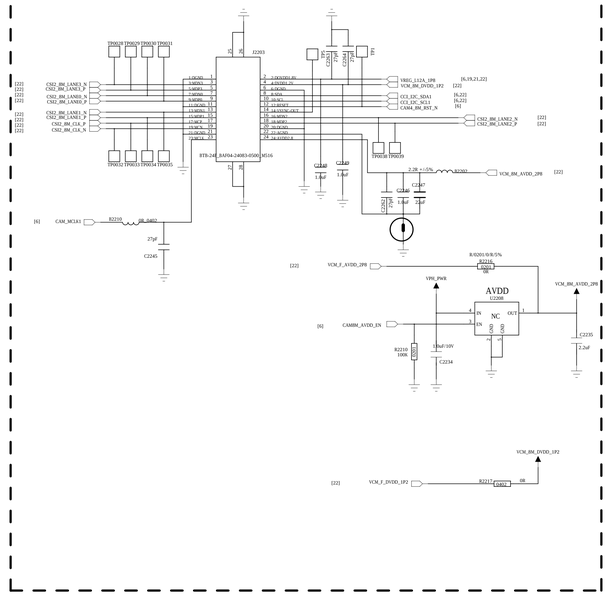

Front Camera

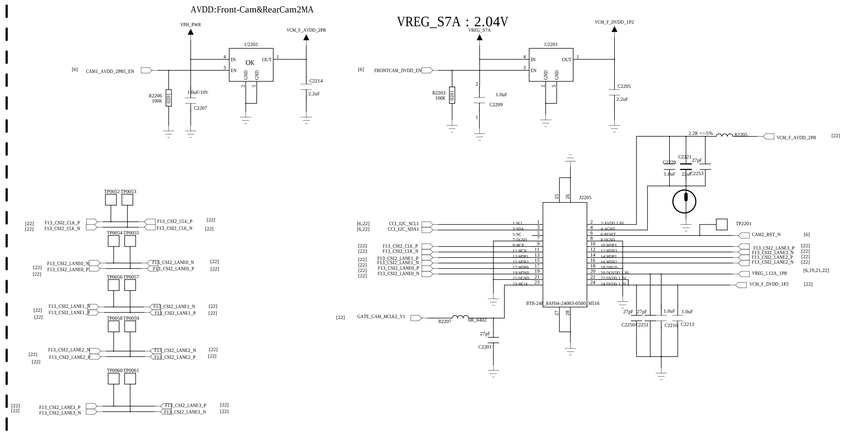

Schematic design notice of "63_PERI_CAMERA_KEYPAD" page.

Note 62-1:	The VCC of I2C_0 is pulled to "VCAM_IO_PMU".
Note 62-2:	I2C control interface of front camera (with AF) must be assigned to I2C-2 bus when PIP/VIV feature be supported.
Note 62-3:	Reserve a capacitor (27pF) on camera's MCLK and shunt it to GND to prevent GPS de-sense.

I2C ADDRESS 2M 0X7a(wite) 0x7b(read)

MIPI SW

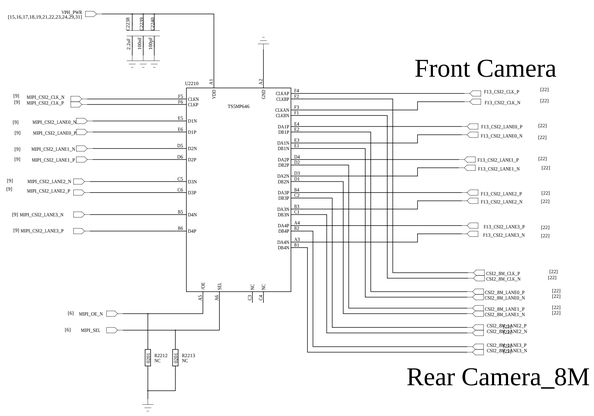

Main FLASHLIGHT

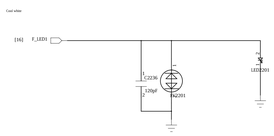

COMPANY: <Company Name>			
TITLE: <Title>			
DRAWN: <Drawn By>	DATED: <Drawn Date>		
CHECKED: <Checked By>	DATED: <Checked Date>	CODE: <Code>	SIZE: A0
QUALITY CONTROL: <QC By>	DATED: <QC Date>	DRAWING NO: <Drawing Number>	REV: <Revision>
RELEASED: <Released By>	DATED: <Release Date>	SCALE: <Scale>	SHEET: 62 34

REVISION RECORD			
LTR	ECO NO:	APPROVED:	DATE:

M-Sensor

M-Sensor I2C Address: 0x0C

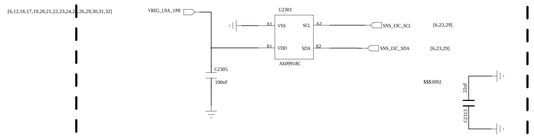

PL_SENSOR

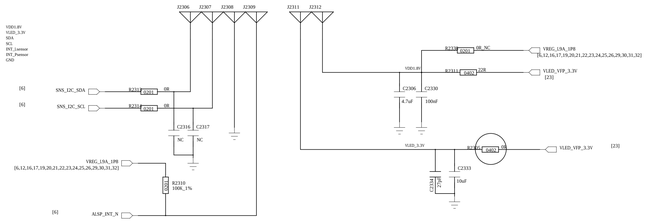

ACC-Sensor

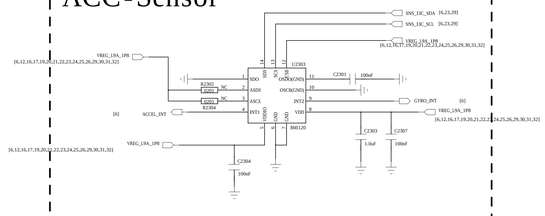

IR

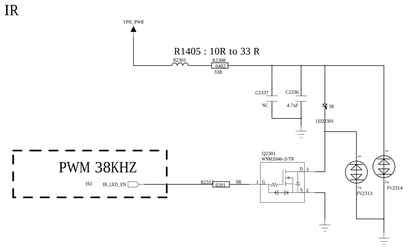

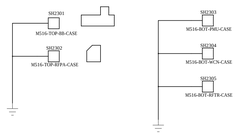

FingerPrint-Sensor

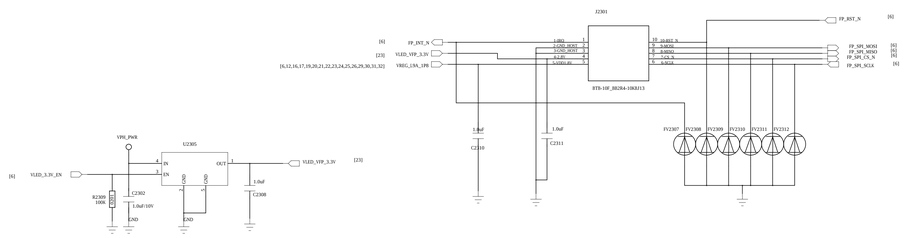

LDO 3.3V or 3.0V for FP & VLEDA

Default: I3C for Mag sensor + ACCEL/GYRO, I2C for the PL Sensor

BAD MARK POINT

MARK POINT

		COMPANY: <Company Name>			
		TITLE: <Title>			
DRAWN: <Drawn By>	DATED: <Drawn Date>				
CHECKED: <Checked By>	DATED: <Checked Date>	CODE: <Code>	SIZE: A0	DRAWING NO: <Drawing Number>	REV: <Revision>
QUALITY CONTROL: <QC By>	DATED: <QC Date>				
RELEASED: <Released By>	DATED: <Release Date>	SCALE: <Scale>		SHEET: 33 OF 34	

REVISION RECORD			
LTR	ECO NO:	APPROVED:	DATE:

Audio Codec

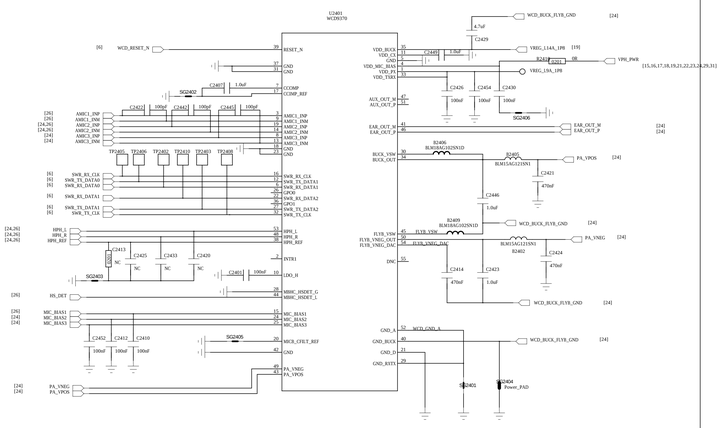

REC

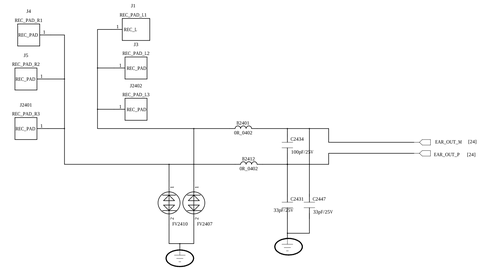

Sub MIC

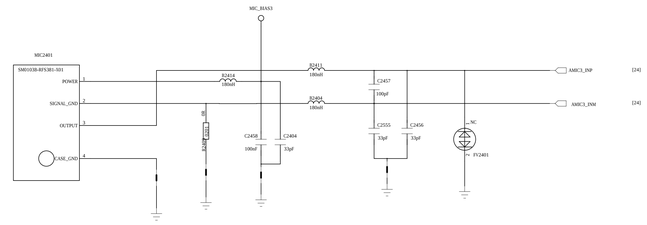

Audio PA

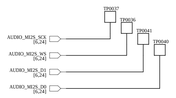

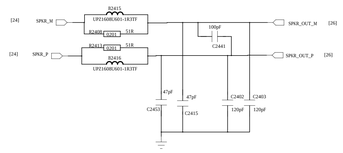

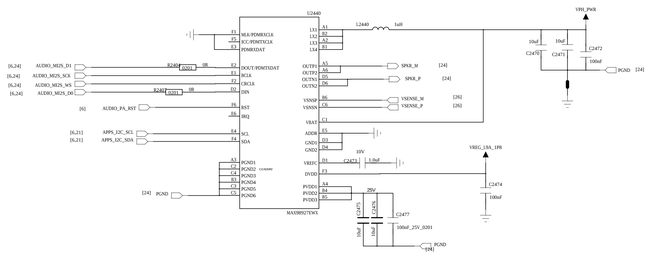

NOTE:PN

Earphone Audio

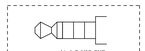

GND
HPH_R
HS_DET
HPH_L
MIC_IN

Note: Ferrite beads and their corresponding bypass capacitors on
on CDC_HPH_L_P, CDC_HPH_L_M and CDC_HPH_REF
are needed to reduce noise generated by audio/FM concurrency

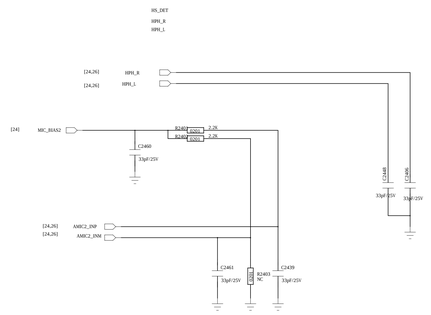

Note: Place B202,B203,C216,C217 close to headset jack connector

Note: For Cable detection

COMPANY:	<Company Name>		
TITLE:	<Title>		
DRAWN: <Drawn By>	DATED: <Drawn Date>		
CHECKED: <Checked By>	DATED: <Checked Date>	CODE: <Code>	SIZE: A0
QUALITY CONTROL: <QC By>	DATED: <QC Date>	DRAWING NO: <Drawing Number>	REV: <Revision>
RELEASED: <Released By>	DATED: <Release Date>	SCALE: <Scale>	SHEET: 34 34

REVISION RECORD			
LTR	ECO NO:	APPROVED:	DATE:

T-Card

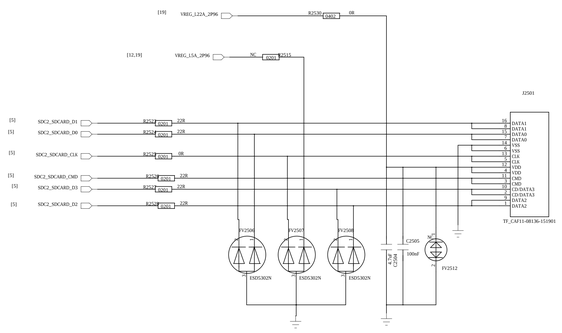

SIM1

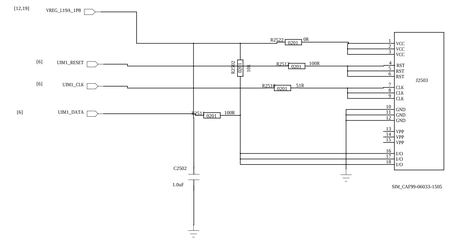

INT

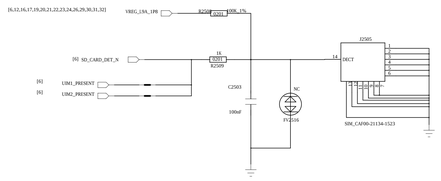

SIM2

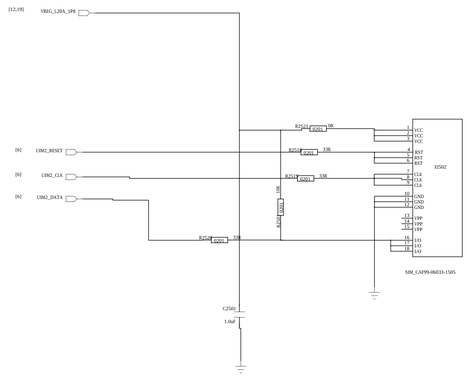

		COMPANY: <Company Name>			
		TITLE: <Title>			
DRAWN: <Drawn By>	DATED: <Drawn Date>				
CHECKED: <Checked By>	DATED: <Checked Date>	CODE: <Code>	SIZE: A0	DRAWING NO: <Drawing Number>	REV: <Revision>
QUALITY CONTROL: <QC By>	DATED: <QC Date>				
RELEASED: <Released By>	DATED: <Release Date>	SCALE: <Scale>		SHEET: 26 OF 34	

SUB_FPC

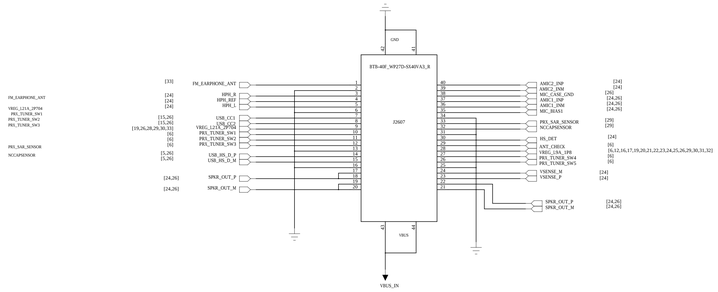

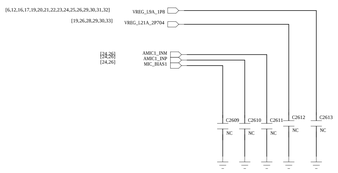

OVP

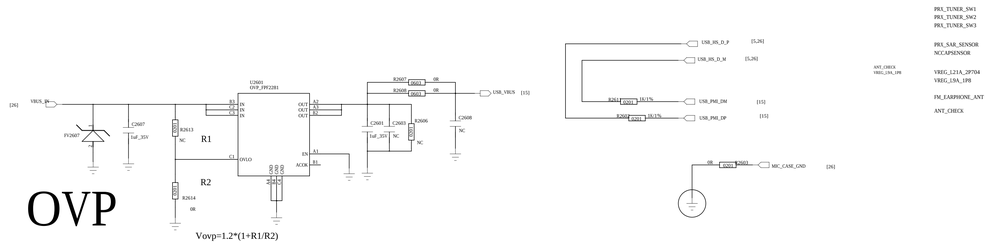

Vovp=1.2*(1+R1/R2)

Power Key

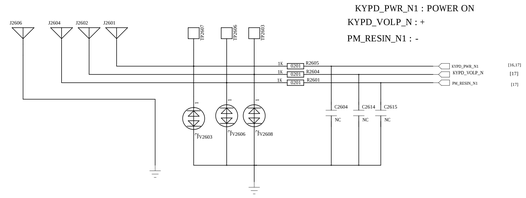

KYPD_PWR_N1 : POWER ON
KYPD_VOLP_N : +
PM_RESIN_N1 : -

Schematic design notice of "65_PERI_Dual_SIM_ICUSB_KEYPAD" page.

Note 65-1: DO NOT put pull-up resistor on PWRKEY

Note 65-2: Volume Up : HOME Key / GND
Volume Down : (KPROW0/KPCOL0) or KPCOL0 / GND

Test point

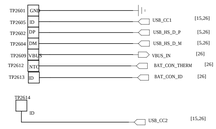

BAT

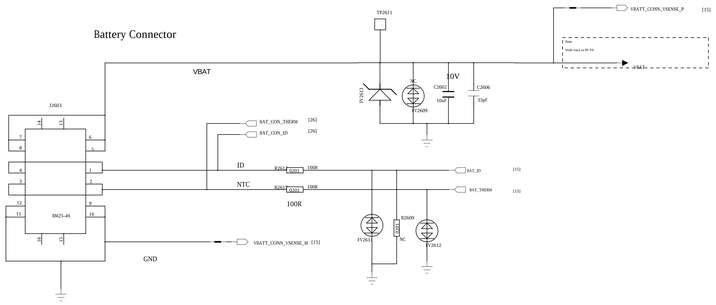

Force USB boot

REVISION RECORD			
LTR	ECO NO:	APPROVED:	DATE:

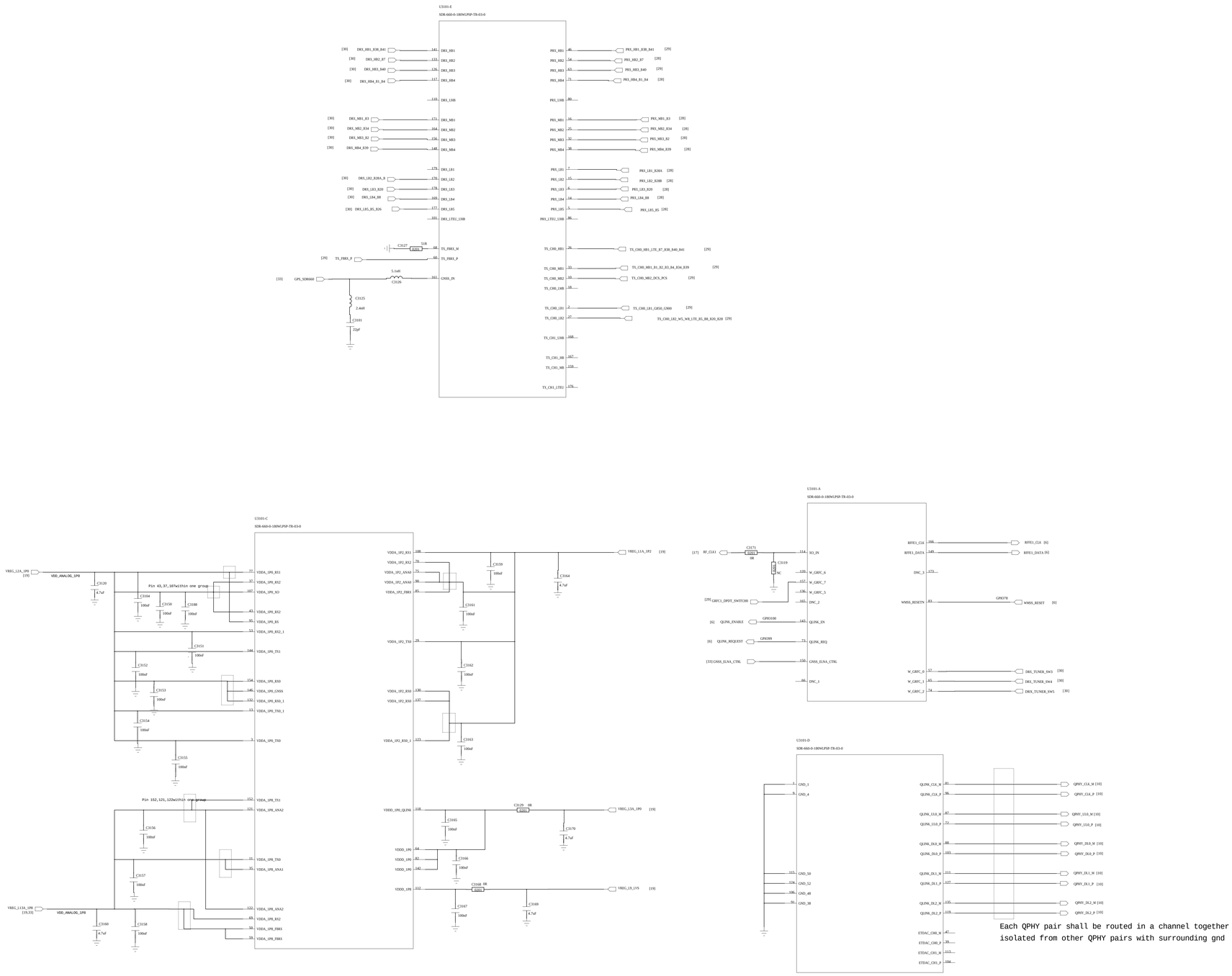

QPHY_ETDAC_TEST

COMPANY:	<Company Name>		
TITLE:	<Title>		
DRAWN: <Drawn By>	DATE: <Drawn Date>		
CHECKED: <Checked By>	DATE: <Checked Date>	CODE: <Code>	SIZE: A0
QUALITY CONTROL: <QC By>	DATE: <QC Date>	DRAWING NO: <Drawing Number>	REV: <Revision>
RELEASED: <Released By>	DATE: <Release Date>	SCALE: <Scale>	SHEET: 27 34

TRX_B1_B3_B4

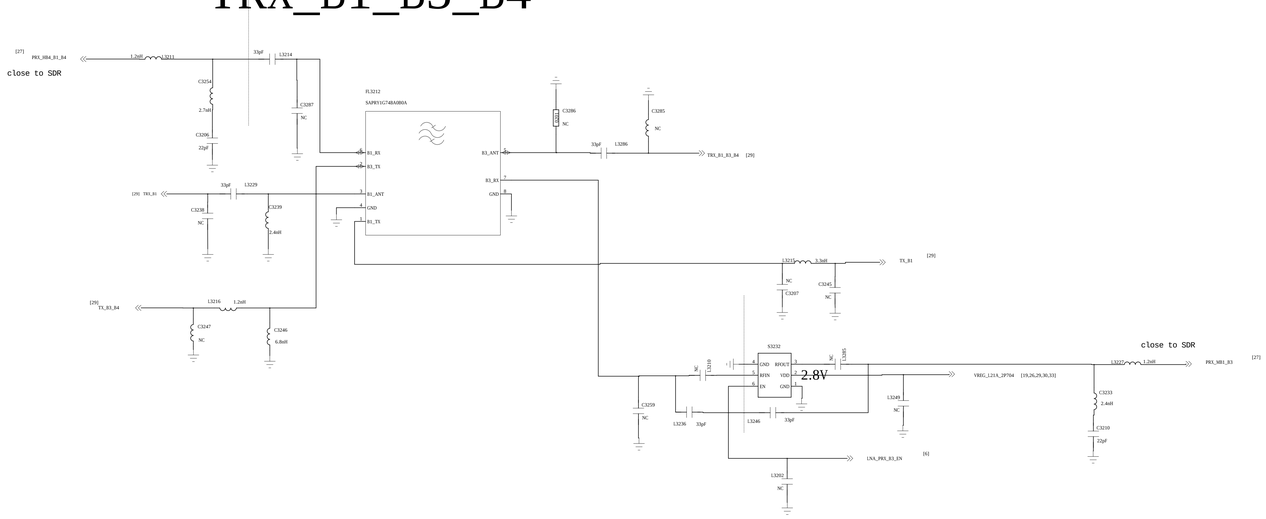

TRX_B7

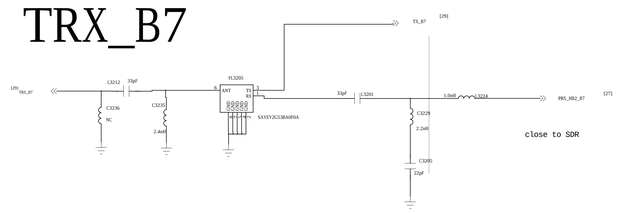

TRX_B8

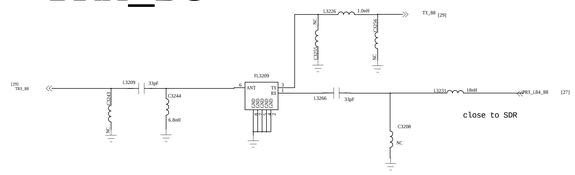

TRX_B2

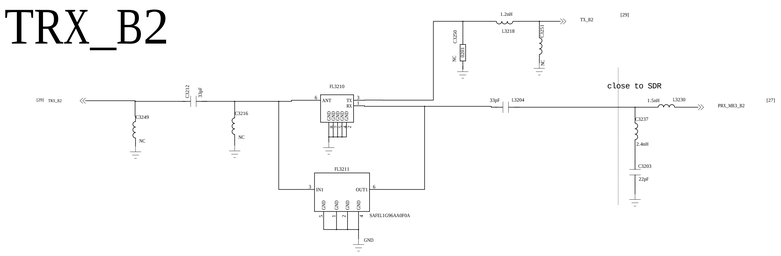

PRX_B34_B39

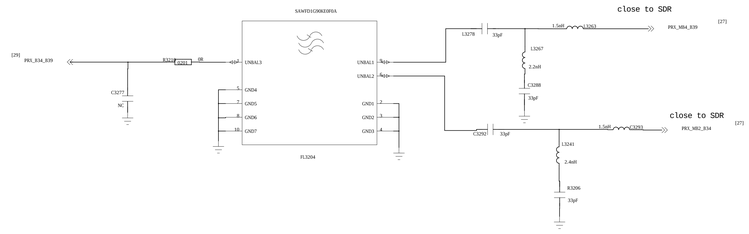

TRX_B28A

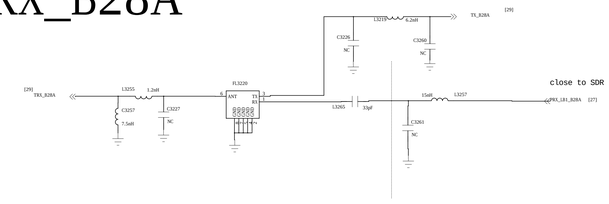

TRX_B5

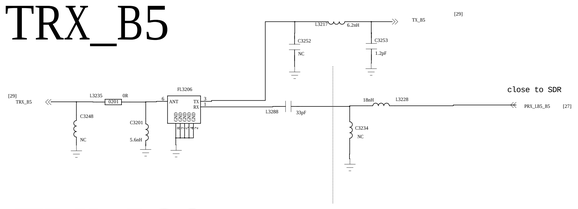

TRX_B20

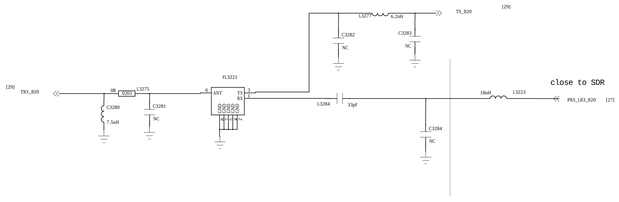

TRX_B28B

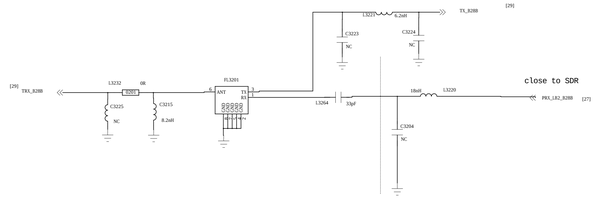

COMPANY: <Company Name>				
TITLE: 20_LTE_DUPLEXER				
CODE: <Code>	SIZE: A0	DRAWING NO: <Drawing Number>		REV: <Revision>
DRAWN: LiuMengya	DATED: <Drawn Date>			
CHECKED: LiLi	DATED: <Checked Date>			
SCALE: <Scale>		SHEET: 28 of 84		

REVISION RECORD			
LTR	ECO NO:	APPROVED:	DATE:

TXM-RF5212A

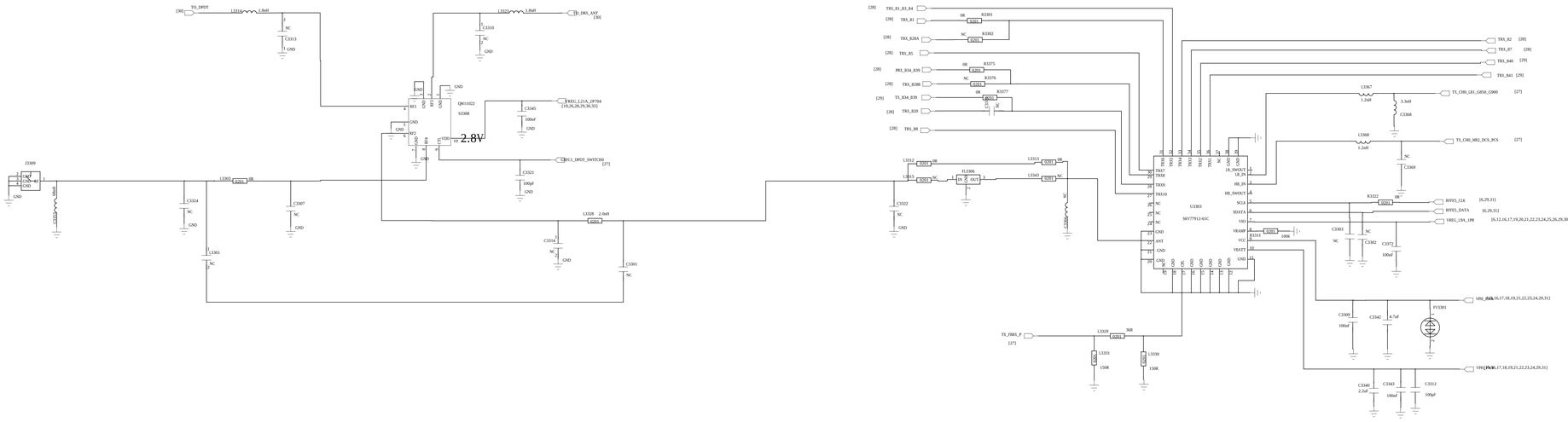

MMMB_PA

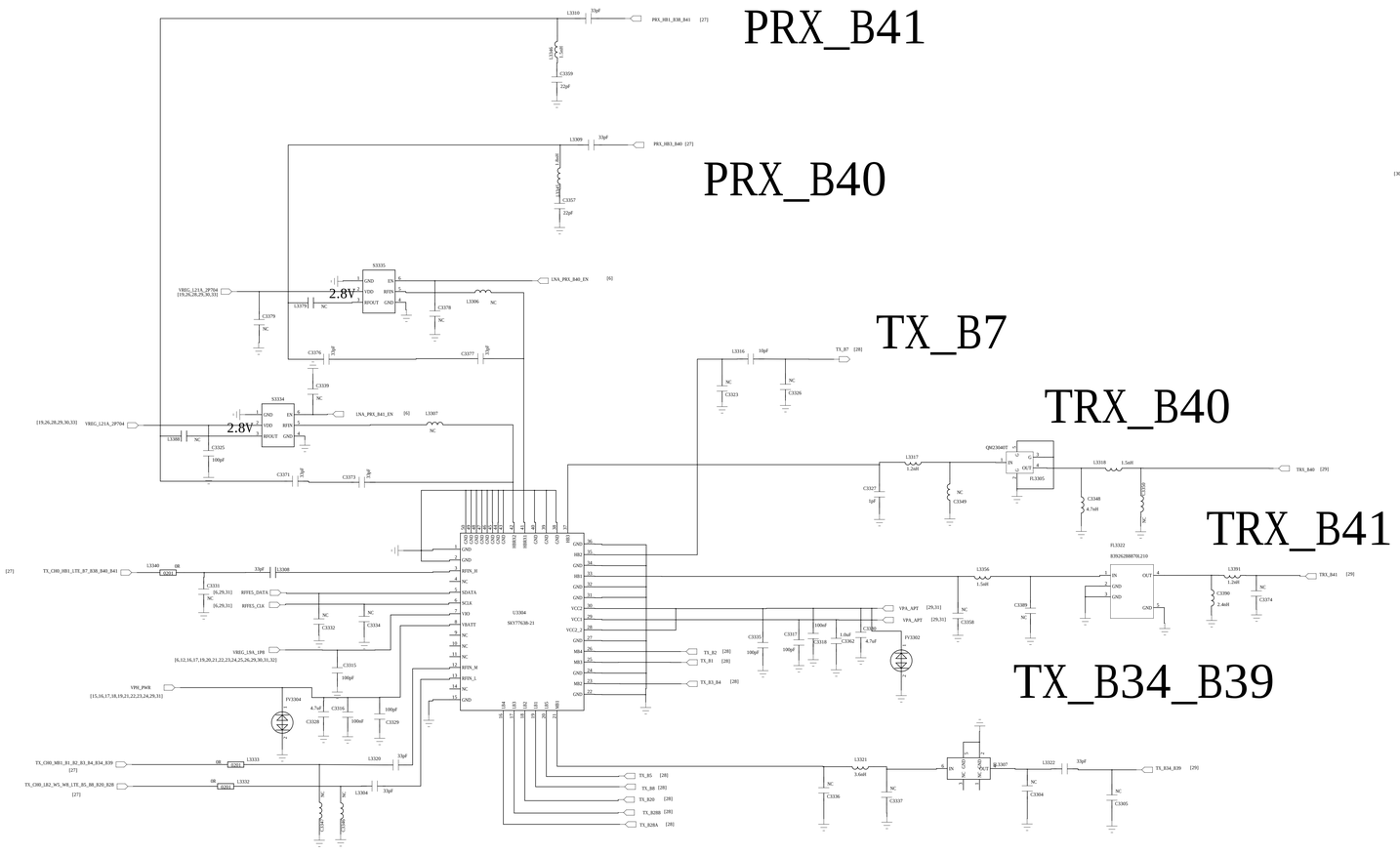

PRX_B41

PRX_B40

TX_B7

TRX_B40

TRX_B41

TX_B34_B39

SAR_SENSOR

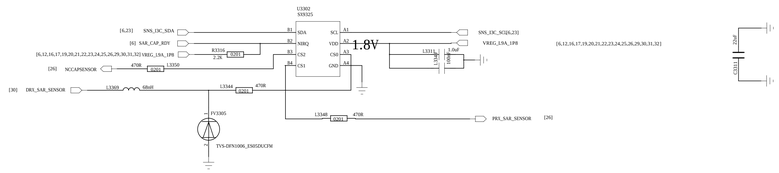

PA_THERMO

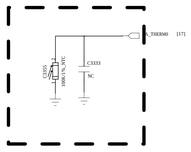

COMPANY: <Company Name>			
TITLE: <Title>			
DRAWN: <Drawn By>	DATED: <Drawn Date>		
CHECKED: <Checked By>	DATED: <Checked Date>	CODE: <Code>	SIZE: A0
QUALITY CONTROL: <QC By>	DATED: <QC Date>	DRAWING NO: <Drawing Number>	REV: <Revision>
RELEASED: <Released By>	DATED: <Release Date>	SCALE: <Scale>	SHEET: 29 OF 34

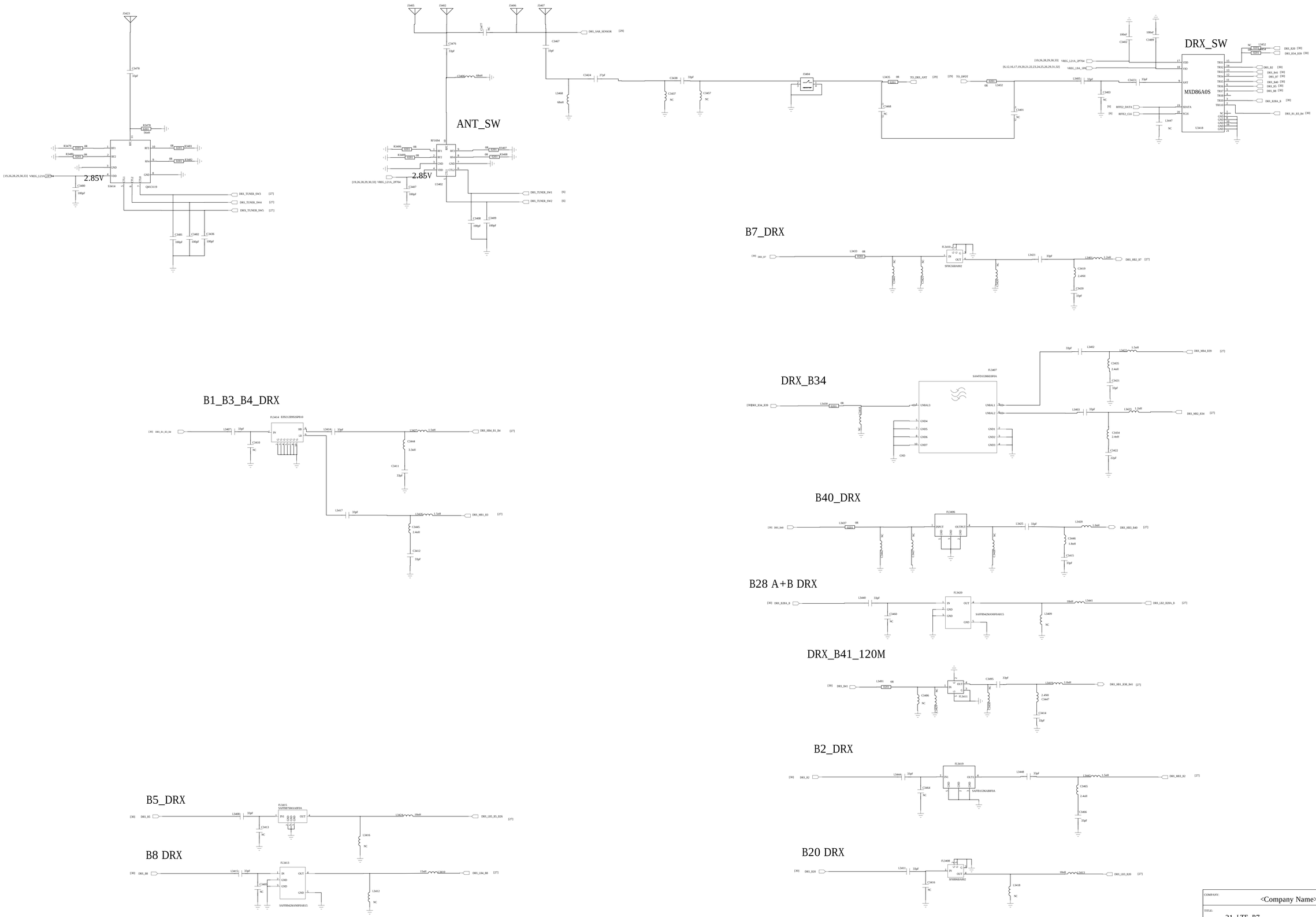

COMPANY:	<Company Name>
TITLE:	21_LTE_B7
CODE: <Code>	SIZE: A0
DRAWING NO: <Drawing Number>	REV: <Revision>
DRAWN: LiuMengya	DATED: <Drawn Date>

APT

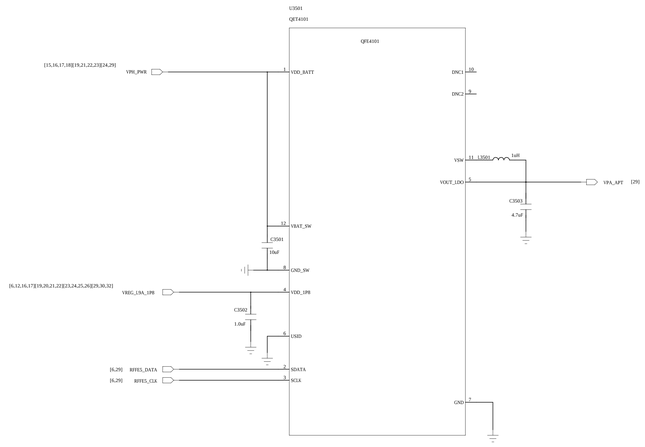

COMPANY: <Company Name>					
TITLE: 22_DRX					
CODE: <Code>	SIZE: A0	DRAWING NO: <Drawing Number>			REV: <Revision>
DRAWN: LiuMengya	DATED: <Drawn Date>				
CHECKED: LiLi	DATED: <Checked Date>	SCALE: <Scale>		SHEET: 31 OF 34	

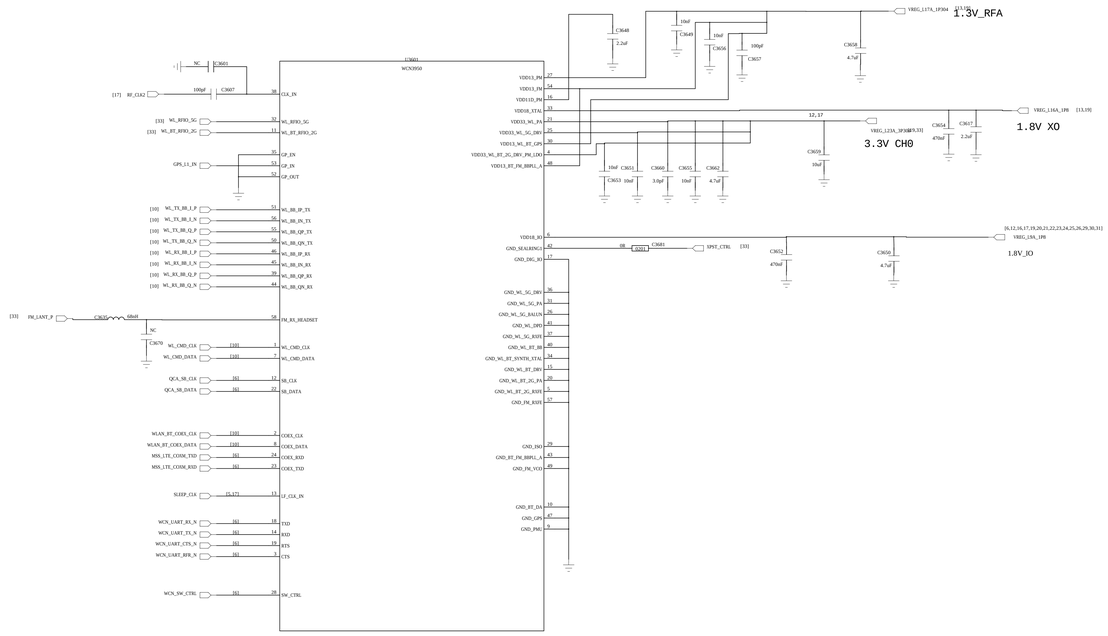

COMPANY: <Company Name>			
TITLE: 24_WCN3680B			
CODE: <Code>	SIZE: A0	DRAWING NO: <Drawing Number>	REV: <Revision>
DRAWN: LiuMengya	DATED: <Drawn Date>		
CHECKED: LiLi	DATED: <Checked Date>	SCALE: <Scale>	SHEET: 32 OF 34

REVISION RECORD			
LTR	ECO NO:	APPROVED:	DATE:

GPS

High rejection saw

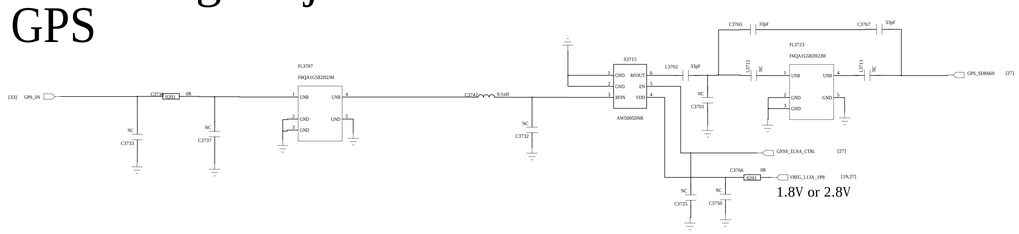

FM

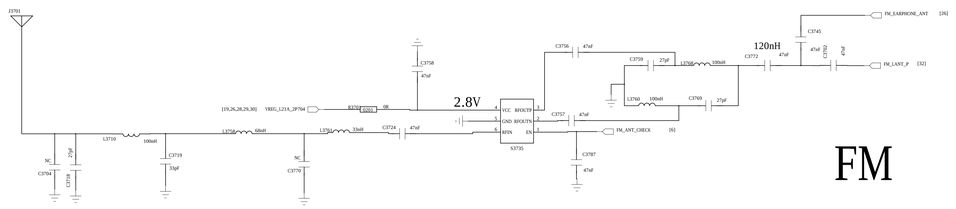

For 5G wifi

GPS_2G_5G_ANT

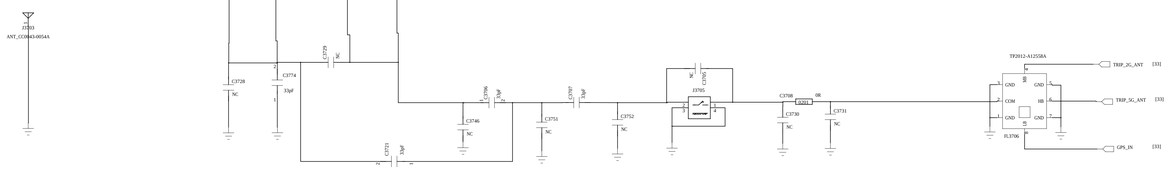

2G_5G_WLAN

		COMPANY: <Company Name>			
		TITLE: <Title>			
DRAWN: <Drawn By>	DATED: <Drawn Date>				
CHECKED: <Checked By>	DATED: <Checked Date>	CODE: <Code>	SIZE: A0	DRAWING NO: <Drawing Number>	REV: <Revision>
QUALITY CONTROL: <QC By>	DATED: <QC Date>				
RELEASED: <Released By>	DATED: <Release Date>	SCALE: <Scale>		SHEET: 33 34	